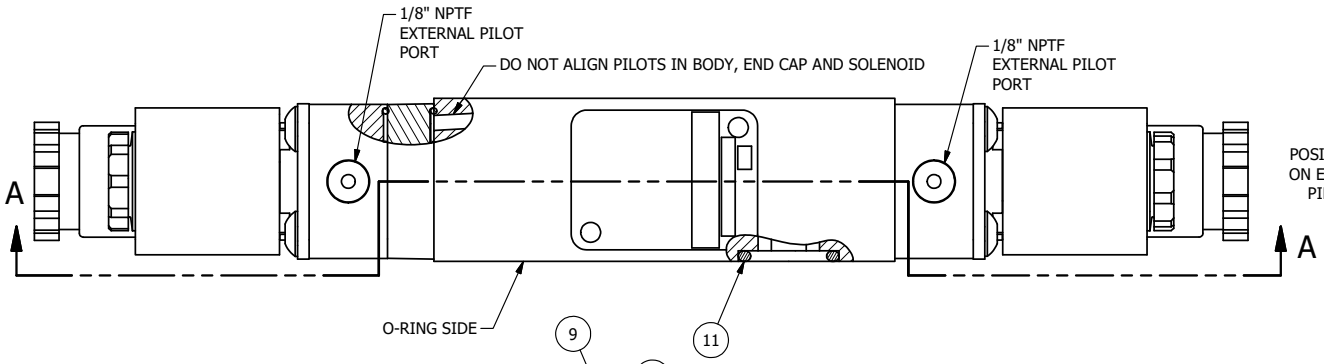

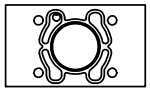

POSITION GASKET AND AY-EMY3D
ON END OF VALVE, DO NOT ALIGN
PILOT HOLES (SIDE 'B' ONLY)

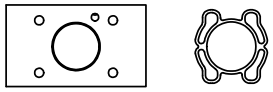

ALIGN PILOT AND SLOT IN ADAPTOR
WITH GASKET IN BETWEEN, BOTH SIDES
(ADAPTOR SHOULD BE INSTALLED AS SHOWN)
SUPPLY 50-150 PSI TO 1/8" NPTF PILOT PORT IN ADAPTOR.

NOTES:
1) ALWAYS GIVE VALVE MODEL AND PART NUMBER WHEN ORDERING PARTS.

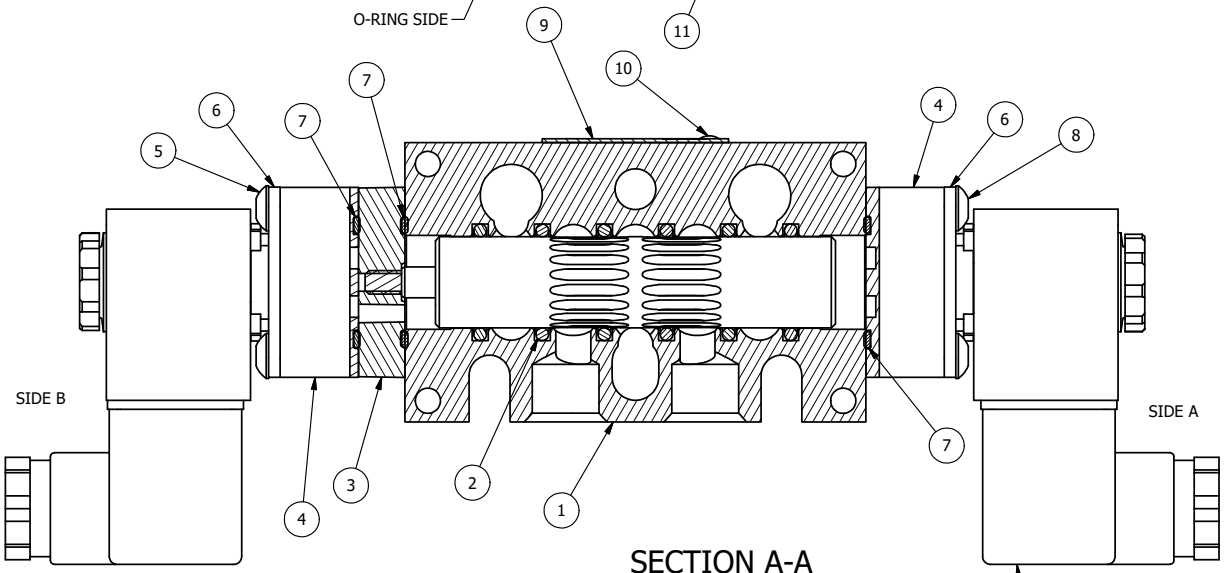

SECTION A-A
SCALE 1 : 1

3/8" CORD GRIP DIN CAP INCLUDED
FORM A, ACC. TO EN 175301-803,
ISO 4400

FLG	QTY	PART NO	DESCRIPTION
11	3	V-110	O-RING, BUNA-N, 70 DURO, AS-114, (REF 5/8 X 13/16 X 3/32), 1/4" SLEEVE, 1/2" SUB, STACK
10	2	V-212	SCREW, #2 X 3/16 DRIVE, TYPE U, OVAL HEAD, STAINLESS STEEL
9	1	AN-114	NAMEPLATE, BLANK, FOR VALVES WITH SPRINGS OR DETENTS
8	4	V-584	SCREW, 10-24 X 1, BUTTON HEAD SOCKET CAP WITH MICROSPHERE APPLIED TO THREADS.
7	3	EMG3	GASKET - END MOUNT SOLENOID, BUNA-N, 1/4" & 3/8" VALVES
6	2	SEC3-7	PLATE, RE-INFORCEMENT, SOLENOID, STAMPED, 304 STAINLESS
5	4	V-601	SCREW, 10-24 X 1-1/2, BUTTON HEAD SOCKET CAP WITH MICROSPHERE ADHESIVE
4	2	V-564	SYSTEM 8 INTRINSICALLY SAFE SOLENOID OPERATOR.
3	1	AY-EMY3D	ASSY - SPR CTR, REGEN CTR SPL, END MOUNT SOLENOID, 1/4" & 3/8" VALVES
2	6	V-39	O-RING, VITON, STD BODY, 1/4" & 3/8" VALVES
1	1	B3-10E	FINISHED - SOLID BODY, UPPER PILOTS, 3/8" STACKING VALVE

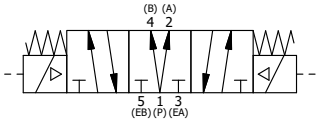

NO.	DATE	REVISION
A	6/1/2018	ECG3 GASKET TO EMG3, SPL ASSY TO AY-EMY3D.

LIMITS ON DIMENSIONS UNLESS OTHERWISE SPECIFIED
2-PL DECIMAL ± .01
3-PL DECIMAL ± .005
FRACTIONAL ± 1/64
ANGULAR ± 1/2'

AAA PRODUCTS INTERNATIONAL
7114 Harry Hines Blvd
Dallas, TX 75235

DRAWN: RMcKenna DATE: 6/12/2016
CHECKED: KWaite DATE: 6/12/2016
SCALE: 1 : 1 SHEET: 1 OF 1
RELEASED: HWomack DATE: 6/12/2016

TITLE: 3/8" STACK, DBL SOL, 3 POS, SPR CTR, SOL SHFT, REGEN CTR SPL, INTR SAFE, 24VDC, EXT PILOT

PART NO.: EBSY3DAZ 24VDC

REV.: A

THE INFORMATION CONTAINED WITHIN THIS DOCUMENT IS PROPRIETARY TO AAA PRODUCTS AND MAY NOT BE DISCLOSED WITHOUT PRIOR WRITTEN CONSENT

D:\Engineering\Product\Valve\Assembly\Standard\SCV\DWG\EBSY3DAZ 24VDC.dw